T.O.S. ELEV.	GRID LOCATION
128'-1"	B-C/3-1

MARK	QTY	DESCRIPTION	LENGTH	GRADE	WEIGHT	REMARKS
	ONE	STRINGER			763	
3A-1	1	C310X31	13'-7 3/4"	300W	128.01	
a3017	1	L178X102X9.5	0'-3 1/8"	300W	1.61	
a3051	2	L102X102X9.5	0'-8 1/2"	300W	6.27	
a3085	1	L178X102X9.5	0'-2 15/16"	300W	1.51	
a3089	1	L178X102X9.5	0'-3 1/8"	300W	1.62	
a3124	1	L178X102X9.5	0'-2 15/16"	300W	1.50	
bp3016	11	8GA	3'-6"	300W	332.45	
bp3025	1	8GA	3'-6"	300W	33.26	
m3042	1	C310X45	13'-9 7/8"	300W	188.18	
m3137	1	C310X45	4'-3 1/16"	300W	57.94	
p3075	1	PL1/4"X2 15/16"	0'-5 3/8"	300W	0.51	
p3076	1	PL1/4"X2 15/16"	0'-7 7/16"	300W	0.70	
p3079	1	PL1/4"X2 15/16"	0'-6 11/16"	300W	0.63	
p3086	1	PL1/4"X3 1/8"	0'-5 3/8"	300W	0.54	
p3098	1	PL1/4"X3 1/8"	0'-7 7/16"	300W	0.75	
p3102	1	PL3/8"X3 1/8"	0'-4 1/4"	300W	0.64	
p3103	1	PL3/8"X3 1/8"	0'-5 3/8"	300W	0.82	
p3114	1	8GA	3'-6"	300W	7.27	
		FIELD BOLTS				
	6	3/4"Ø A325N	2"			

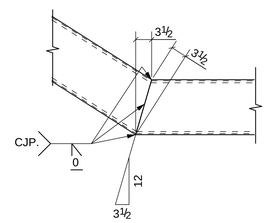

DETAIL- 1

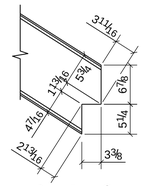

DETAIL- 2

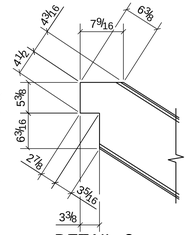

DETAIL- 3

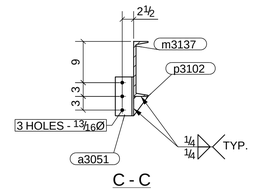

C - C

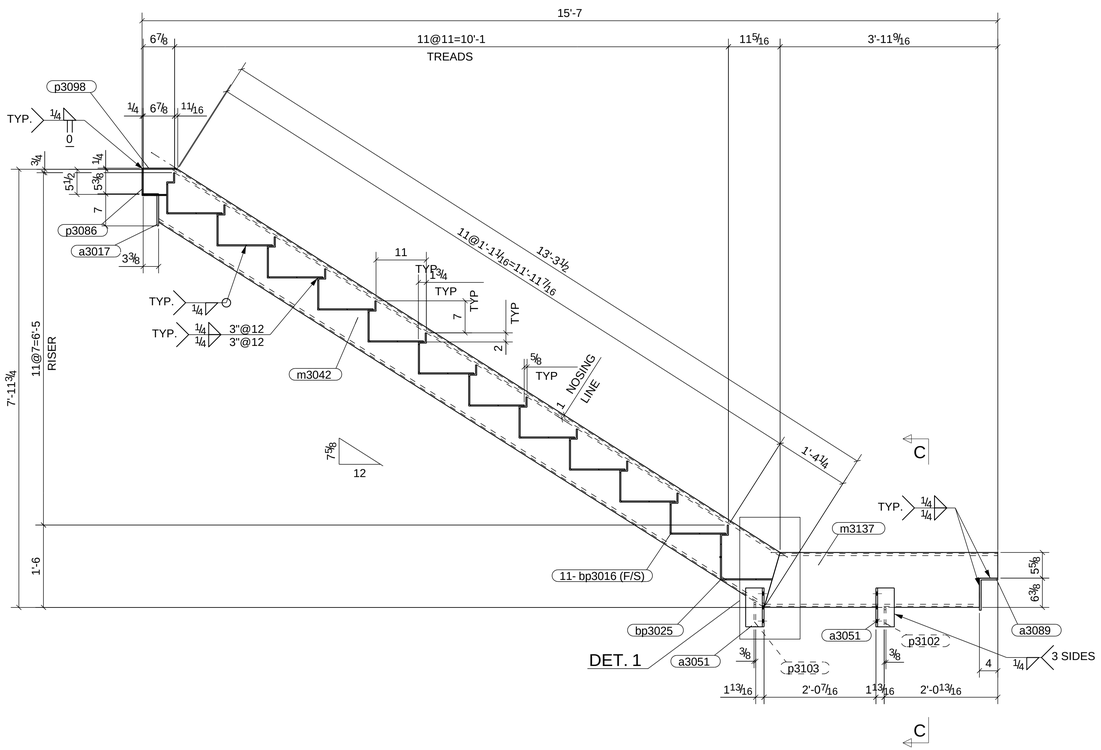

A - A

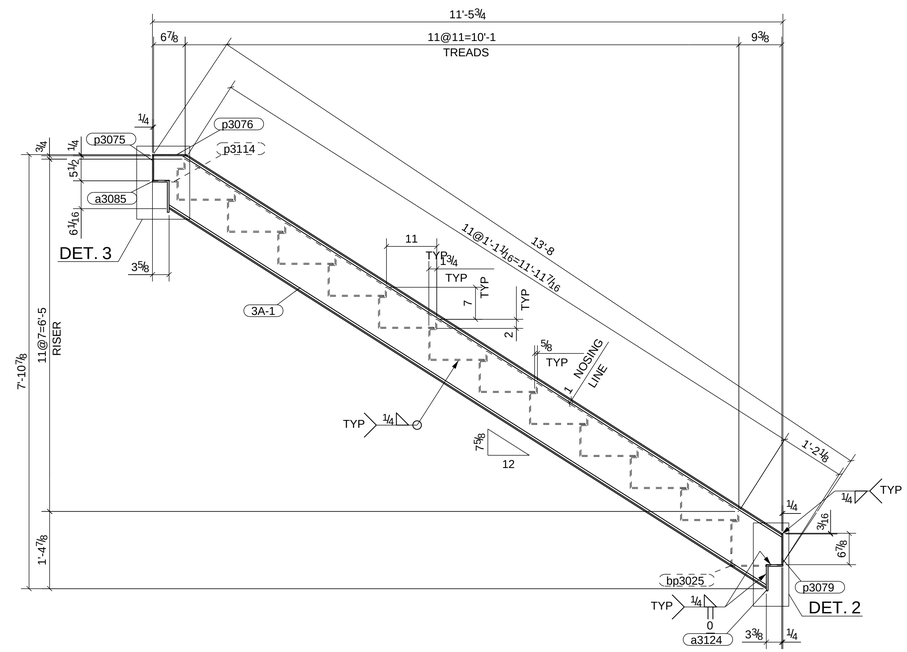

B - B

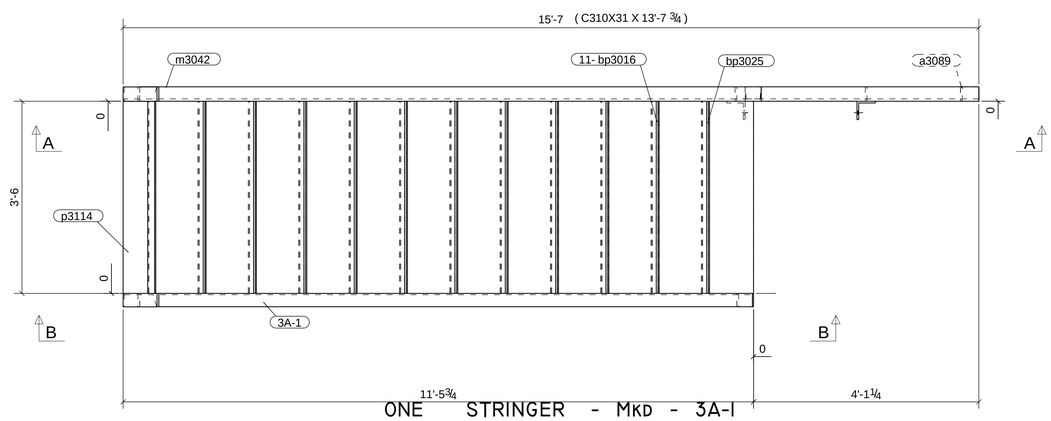

ONE STRINGER - MKD - 3A-1

FOR REVIEW

Tekla structures